# Wind Energy

## Lubrication Solutions

### Graco Lubrication Equipment Generates more profit

- Increase technician efficiency.
- Extend component life and save money by automatically lubricating when you need it most-while your turbine is working. Graco's lubrication systems allow you to focus expensive technician time on where you need it most.
- Field-Proven performance designed to increase efficiency and save you money.

PROVEN QUALITY. LEADING TECHNOLOGY.

# Real Solutions for Real people

## Keep Profits Turning

Graco offers a complete line of automatic lubrication systems that are built for the demanding conditions in a wind turbine. All wind turbines have critical bearings and drives, that when lubricated properly extend time between service calls and extend the life of vital components. Graco lube systems are on the job when your equipment is working to provide optimal lubrication every few hours with a small amount of grease.

Don't risk downtime by manually under or over lubricating your wind turbine.
Choose Graco to provide round the clock protection.

*Graco lubrication equipment optimizes the maintenance process to save money.*

### G3™ Pumps
Designed to meet changing temperatures, challenging installation requirements and changing grease types.

### GL-Series Grease Injectors
Accurate, reliable and adjustable lubrication for any lube point in your turbine.

### Trabon™ Divider Valves
Available in both one piece blocks and modular assemblies, they reliably and precisely lubricate and protect your equipment.

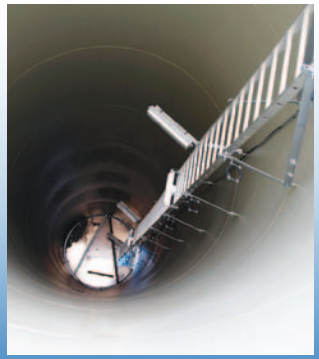

### Graco equipment keeps you informed

Our advanced monitoring capabilities work seamlessly with wind turbine control systems to provide you the peace of mind knowing your assets are protected profit generators.

# Graco's got you covered

## Facilities Worldwide for Global Support

### Save technician time for where you need it most

Calibration, visual inspections, system optimization-do more with your expensive labor hours by letting Graco lube your turbine. Graco's complete line of quality equipment can take care of these components:

- Main Bearings
- Blade Pitch Bearings
- Generator
- Yaw Bearings

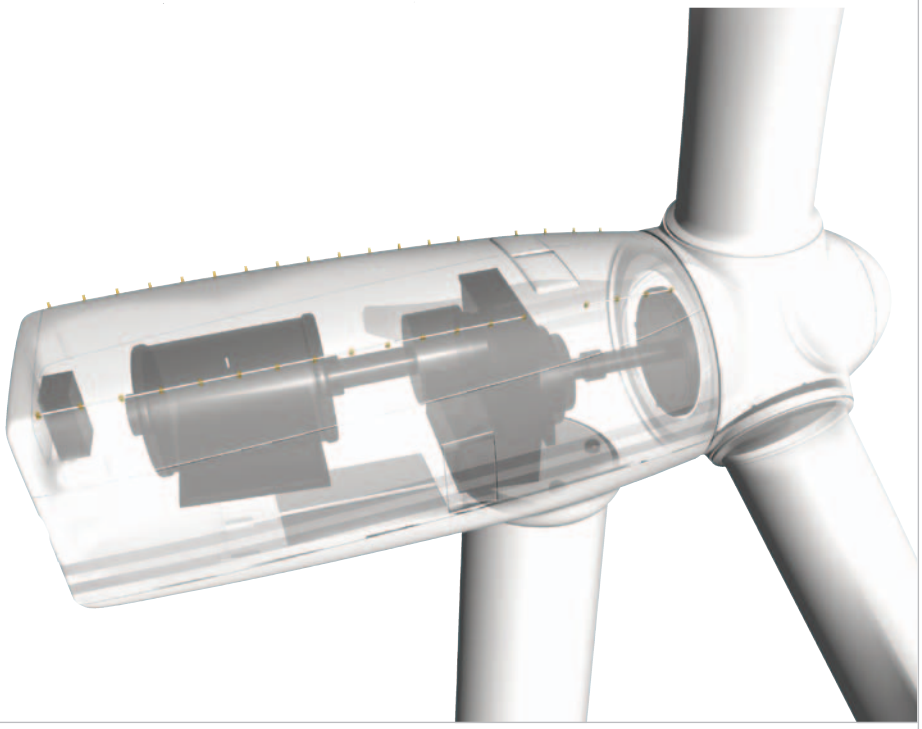

**Single Series™ Lubricators**
Designed for remote and hard to reach lube points, Graco's Single Series lubricators deliver predetermined lubricant directly to your lubrication point.

**Lubrication Pinion**
Consistently applies lubricant directly and precisely to the gear tooth flanks. Lubricant is supplied by the G3 pump at the interval your system requires.

**Gear Spray Valves**
For even more control and precise application of lubricant onto the open gear teeth. Uses less lubricant, and provides a thin film for protection.

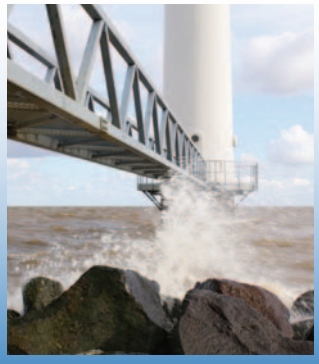

### Harness extreme environments

Extremes in temperature, salt spray, dust storms and spinning mounting locations are no match for the durability delivered by Graco lubrication products. Send a powerful message to your customers by using top-quality Graco equipment and deliver top-quality results.

## ABOUT GRACO

Founded in 1926, Graco is a world leader in fluid handling systems and components. Graco products move, measure, control, dispense and apply a wide range of fluids and viscous materials used in vehicle lubrication, commercial and industrial settings.

The company's success is based on its unwavering commitment to technical excellence, world-class manufacturing and unparalleled customer service. Working closely with qualified distributors, Graco offers systems, products and technology that set the quality standard in a wide range of fluid handling solutions. Graco provides equipment for spray finishing, protective coating, paint circulation, lubrication, and dispensing sealants and adhesives, along with power application equipment for the contractor industry. Graco's ongoing investment in fluid management and control will continue to provide innovative solutions to a diverse global market.

## GRACO LOCATIONS

*MAILING ADDRESS*
P.O. Box 1441
Minneapolis, MN 55440-1441
Tel: 612-623-6000
Fax: 612-623-6777

### AMERICAS

*MINNESOTA*
Worldwide Headquarters
Graco Inc.
88-11th Avenue N.E.
Minneapolis, MN 55413

### EUROPE

*BELGIUM*
European Headquarters
Graco N.V.
Industrieterrein-Oude Bunders
Slakweidestraat 31
3630 Maasmechelen,
Belgium
Tel: 32 89 770 700
Fax: 32 89 770 777

### ASIA PACIFIC

*AUSTRALIA*
Graco Australia Pty Ltd.
Suite 17, 2 Enterprise Drive
Bundoora, Victoria 3083
Australia
Tel: 61 3 9468 8500
Fax: 61 3 9468 8599

*CHINA*
Graco Hong Kong Ltd.
Shanghai Representative Office
Building 7
1029 Zhongshan Road South
Huangpu District
Shanghai 200011
The People's Republic of China
Tel: 86 21 649 50088
Fax: 86 21 649 50077

*INDIA*
Graco Hong Kong Ltd.
India Liaison Office
Room 432, Augusta Point
Regus Business Centre 53
Golf Course Road
Gurgaon, Haryana
India 122001
Tel: 91 124 435 4208
Fax: 91 124 435 4001

*JAPAN*
Graco K.K.
1-27-12 Hayabuchi
Tsuzuki-ku
Yokohama City, Japan 2240025
Tel: 81 45 593 7300
Fax: 81 45 593 7301

*KOREA*
Graco Korea Inc.
Shinhan Bank Building
4th Floor #1599
Gwanyang-Dong, Dongan-Ku,
Anyang-si, Korea 431-060
Tel: 82 31 476 9400
Fax: 82 31 476 9801

All written and visual data contained in this document are based on the latest product information available at the time of publication.
Graco reserves the right to make changes at any time without notice.

Graco is certified ISO 9001.

**Europe**
+32 89 770 700
FAX +32 89 770 777
WWW.GRACO.COM

©2011 Graco Inc. 340522E Rev. A 07/11 Printed in Europe.
All other brand names or marks are used for identification purposes and are trademarks of their respective owners.